Introduction

We have seen the instruction set of the 8085 microprocessor. For clear understanding of the each instruction, it is necessary to see how microprocessor executes these instructions, which signals are activated to execute a particular instruction and at what instant. All this information can be plotted graphically. The graphical representation of the instruction execution in steps with respect to the time (clock signal) is called **'timing diagram.'**

In this chapter, we will first see what do we mean by instruction cycle, machine cycles and T- states. After clear understanding of these things we will see the rules and standards used in the timing diagrams and then we will see the timing diagrams of all 8085 instructions.

Instruction Cycle, Machine Cycle and T-State

During normal operation, the microprocessor sequentially fetches, decodes and executes one instruction after another until a halt instruction (HLT) is executed. The fetching, decoding and execution of a single instruction constitutes an **instruction cycle**, which consists of one to five read or write operations between processor and memory or input/output devices. Each memory or I/O operation requires a particular time period, called **machine cycle**. In other words, to move byte of data in or out of the microprocessor, a machine cycle is required. Each machine cycle consists of 3 to 6 clock periods/cycles, referred to as **T-states**. Therefore we can say that, one instruction cycle consists of one to five machine cycles and one machine cycle consists of three to six T- states i.e. three to six clock periods, as shown in the Fig. 5.1.1.

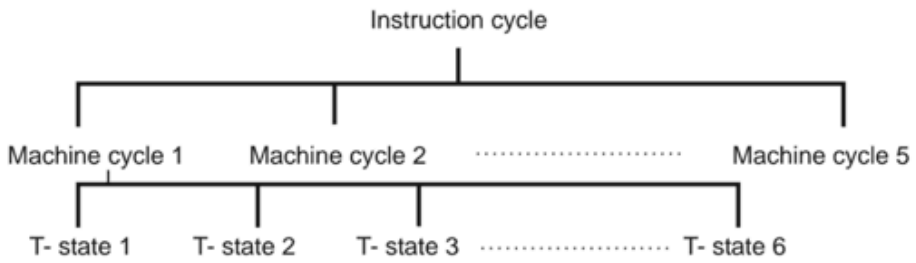

Fig. 5.1.1 Relation between instruction cycle, machine cycle and T-state

There are seven different types of machine cycles in the 8085A. Three status signals IO/$\overline{M}$, S_1 and S_0 identify each type as shown in Table 5.1.1. These signals are generated at the beginning of each machine cycle and remain valid for the duration of the cycle.

Copyrighted material

Machine cycle	Status			Control		
	$IO/\overline{M}$	S_1	S_0	$\overline{RD}$	$\overline{WR}$	INTA
Opcode Fetch	0	1	1	0	1	1
Memory Read	0	1	0	0	1	1
Memory Write	0	0	1	1	0	1
I/O Read	1	1	0	0	1	1
I/O Write	1	0	1	1	0	1
INTR Acknowledge	1	1	1	1	1	0
Bus Idle	0	0	0	1	1	1

Table 5.1.1 8085 machine cycles

Review Question

1. *Distinguish between an instruction cycle, a machine cycle and a clock cycle with an example instruction.*

Representation of Signals

Before going to see the timing diagram, we will see the signals and its representation used in the timing diagrams.

Clock Signal : The 8085 divides the clock frequency provided at x_1 and x_2 inputs by 2, which is called **operating frequency**. All the operations within the 8085 are synchronized with this operating frequency. Therefore in the timing diagram operating frequency clock is shown on the top and then the signals are shown with reference to operating frequency clock. Ideally, the clock signal should be square wave with zero rise time and fall time, as shown in the Fig. 5.2.1. But in practice, we do not get zero rise time and fall time. Therefore the clock and other signals are always shown with finite rise and fall times. Fig. 5.2.1 shows the practical way of representing clock signal.

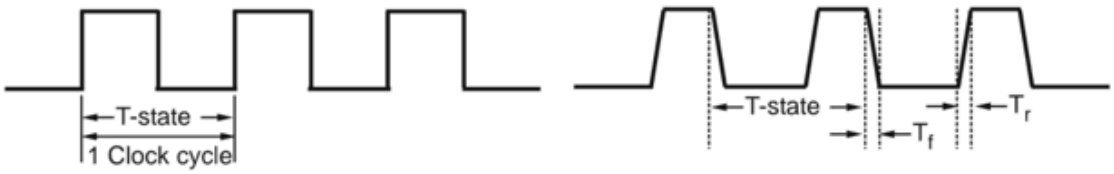

(a) Ideal **(b) Practical**

Fig. 5.2.1 Clock signal representation

Single Signal : Single signal is represented by a line. It may have status either logic 0 or logic 1 or tri-state. The change in the state of the signal takes finite time and hence the state change of signal is represented with finite rise time and fall time, as shown in the Fig. 5.2.2.

Copyrighted material

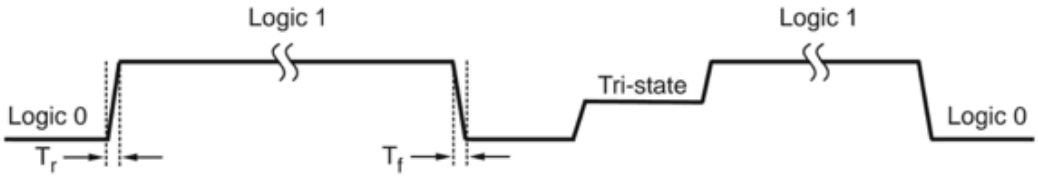

Fig. 5.2.2 Single signal representation

Group of Signals :

Group of signals is also called a bus e.g. address bus and data bus. To avoid complications in the timing diagram these signals are grouped and shown in the form of block as shown in Fig. 5.2.3.

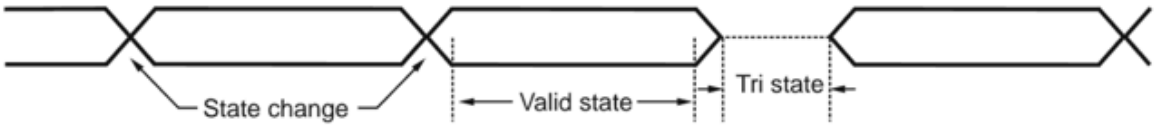

Fig. 5.2.3 Group of signals representation

In the group representation individual state is not considered, but the group state is considered. Change in state of single signal changes the state of group. It is represented by the cross as shown the Fig. 5.2.3. The tri-state condition of the group signals is shown by dotted lines. Two straight lines represent valid state/stable state.

In microprocessor systems, activation of signal/signals depends on the state of other signal/signals. Such situations are shown in the timing diagrams with the help of specific symbols. There are four possibilities :

Activation of a signal with the change in state of other signal.

Activation of a signal with the change in state of other signals.

Activation of signals with the change in state of other signal.

Activation of signals with the change in state of other signals.

Fig. 5.2.4 shows the representation of dependence of the signal/signals, in the timing diagram.

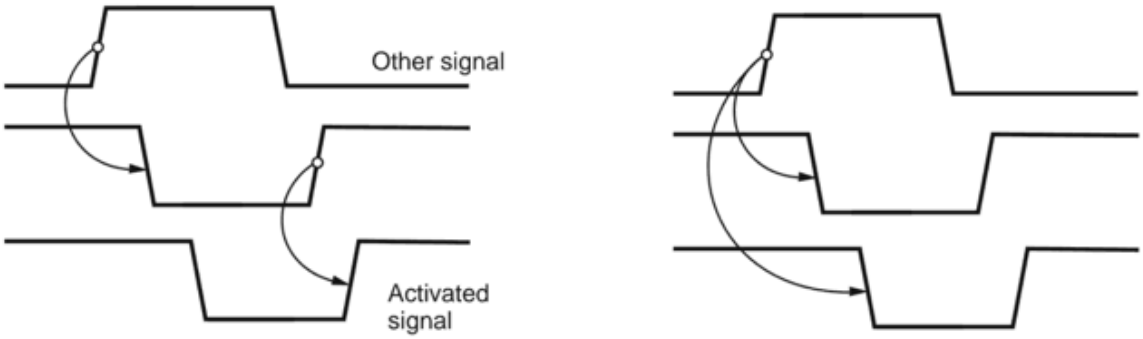

(a) Activation of a signal with the change in state of other signal

(b) Activation of signals with the change in state of other signal

Copyrighted material

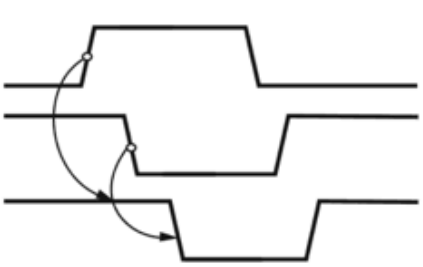

(c) Activation of a signal with the change in state of other signals

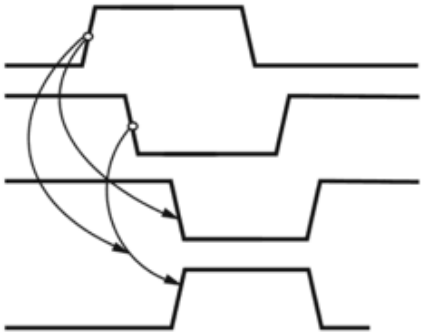

(d) Activation of signals with the change in state of other signals

Fig. 5.2.4

Signal Timings

In 8085 microprocessor, signals are activated at specific instant for specific time period. Once we understand this, it is very easy to draw timing diagrams. The following section explains when the signals are activated and for what period they remain in active state.

ALE (Address Latch Enable) :

This signal is active high signal. It is activated in the beginning of the T_1-state of each machine cycle, except bus idle machine cycle and it remains active in the T_1-state as shown in the Fig. 5.3.1.

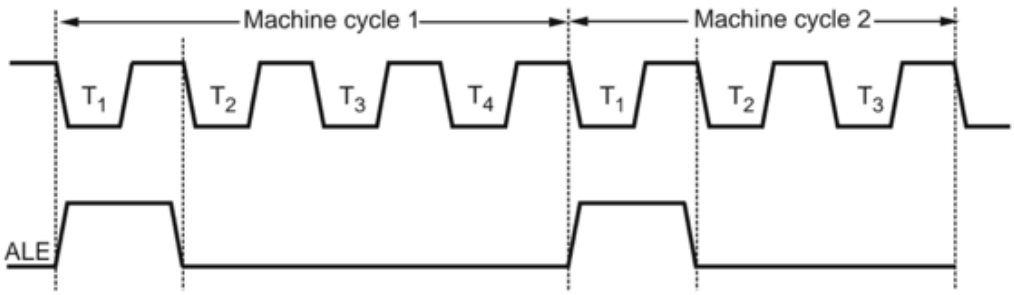

Fig. 5.3.1 ALE activation and its period

Copyrighted material

A_0 - A_7 (Lower byte address) :

The lower byte of address is available on the multiplexed address/data bus (AD_0-AD_7) during T_1-state of each machine cycle, except bus idle machine cycle, as shown in Fig. 5.3.2.

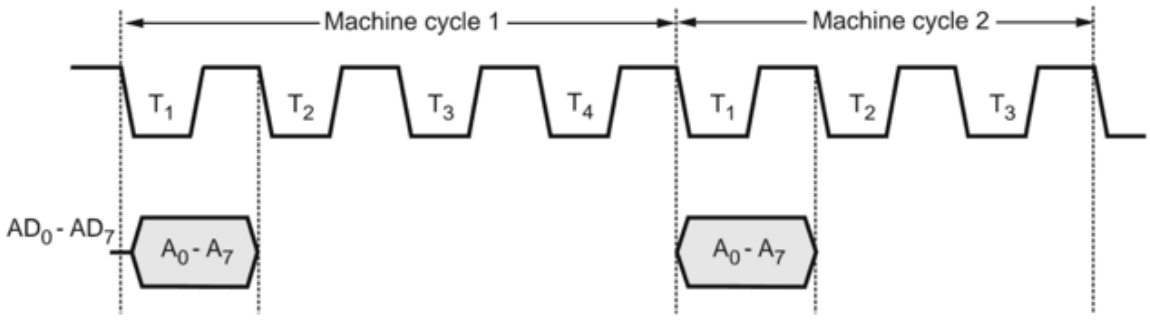

Fig. 5.3.2 Lower address on the multiplexed bus

D_0 - D_7 (Data bus) :

The data from memory or I/O device and from microprocessor to memory or I/O device is transferred during T_2 and T_3 - states. It is important to note that in read machine cycle, data will appear on the data bus during the later part of the T_2 - state, as shown in the Fig. 5.3.3, whereas in write cycle data will appear on the data bus at the beginning of the T_2 - state, as shown in the Fig. 5.3.3.

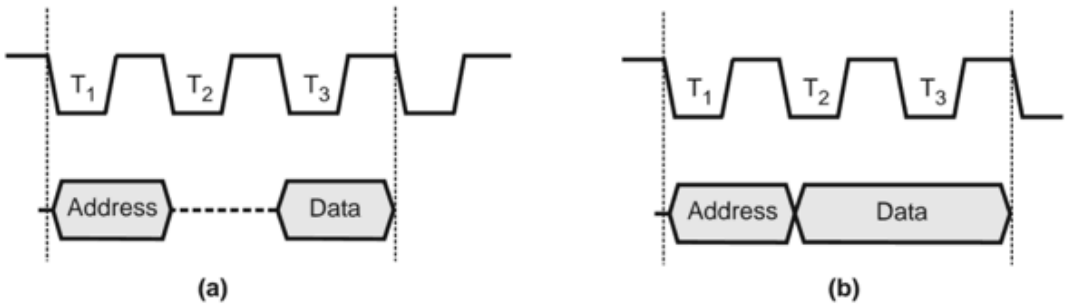

Fig. 5.3.3 Data bus

To read data from memory or I/O device it is necessary to select memory or I/O device. After selection, device will put the data from selected location on the data bus. This action needs finite time. This time is referred to as **'access time'**. In case of write cycle, data is available in the register set of the microprocessor and it can put that data on the data bus with zero access time.

A_8 - A_{15} (Higher byte address) :

The higher byte of address is available on the A_8 - A_{15} bus during T_1, T_2 and T_3 - state of each machine cycle, except bus idle machine cycle, as shown in Fig. 5.3.4.

Copyrighted material

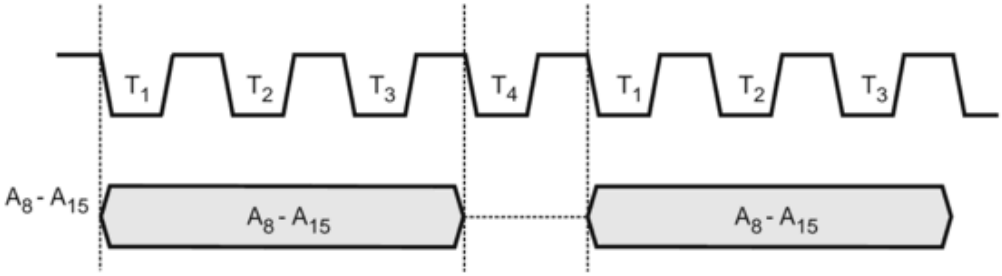

Fig. 5.3.4 Higher byte address on A_8 - A_{15}

IO/$\overline{M}$, S_0, S_1 :

These signals are called status signals. They decide the type of machine cycle to be executed. They are activated at the beginning of T_1 - state of each machine cycle and remain active till the end of the machine cycle.

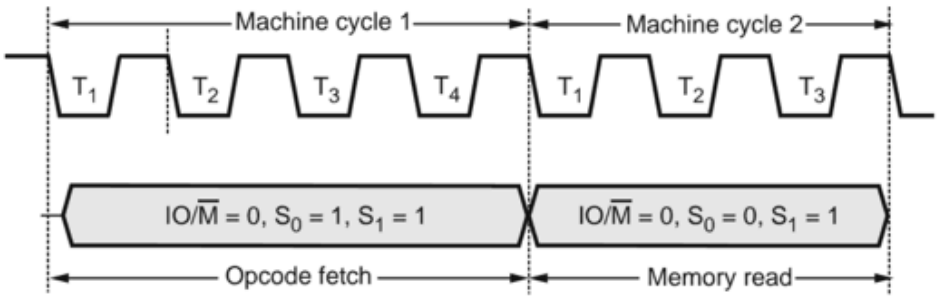

Fig. 5.3.5 Status signals

$\overline{RD}$ and $\overline{WR}$: These signals decide the direction of the data transfer. When $\overline{RD}$ signal is active, data is transmitted from memory or I/O device to the microprocessor and when $\overline{WR}$ signal is active, data is transmitted from microprocessor to the memory or I/O device. Both signals are never active at a time.

As we know data transfer in 8085 takes place during T_2 and T_3, these signals are activated during T_2 and T_3, as shown in the Fig. 5.3.6.

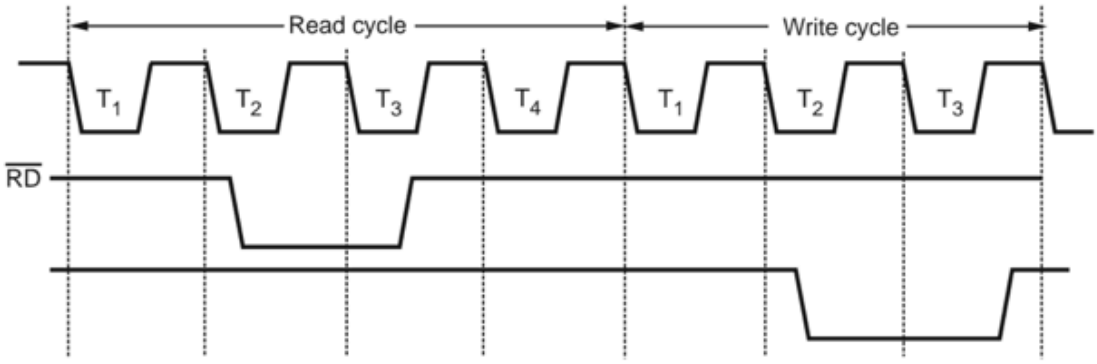

Fig. 5.3.6 $\overline{RD}$ and $\overline{WR}$ signals

Copyrighted material

Review Questions

1. *In which T-cycle the ALE signal is activated ?*
2. *Explain how the multiplexed data/address bus is shared for data and address.*

8085 Machine Cycles and their Timings

The 8085 has seven machine cycles. These are :

1. Opcode Fetch 2. Memory Read
3. Memory Write 4. I/O Read
5. I/O Write 6. Interrupt Acknowledge 7. Bus Idle.

Opcode Fetch Cycle

The first machine cycle of every instruction is opcode fetch cycle in which the 8085 finds the nature of the instruction to be executed. In this machine cycle, processor places the contents of the Program Counter on the address lines and through the read process, reads the opcode of the instruction. Fig. 5.4.1 (a) shows flow of data (opcode) from memory to the microprocessor and Fig. 5.4.1 (b) shows the timing diagram for opcode fetch machine cycle. The length of this cycle is not fixed. It varies from 4T-states to 6T-states as per the instruction. The following section describes the opcode fetch cycle in step by step manner.

Step 1 : (State T_1) In T_1-state, the 8085 places the contents of program counter on the address bus. The high-order byte of the PC is placed on the A_8-A_{15} lines. The low-order byte of the PC is placed on the AD_0 - AD_7 lines which stays on only during T_1. Thus microprocessor activates ALE (Address Latch Enable) which is used to latch the low-order byte of the address in external latch before it disappears.

In T_1, 8085 also sends status signals $IO/\overline{M}$, S_1 and S_0. $IO/\overline{M}$ specifies whether it is a memory or I/O operation, S_1 status specifies whether it is read/write operation; S_1 and S_0 together indicate read, write, opcode fetch, machine cycle operation or whether it is in HALT state. In opcode fetch machine cycle status signals are : $IO/\overline{M} = 0$, $S_1 = 1$, $S_0 = 1$.

Step 2 : (State T_2) In T_2, low-order address disappears from the AD_0 - AD_7 lines. (However A_0 - A_7 remain available as they were latched during T_1). In T_2, 8085 sends $\overline{RD}$ signal low to enable the addressed memory location. The memory device then places the contents of addressed memory location on the data bus (AD_0 - AD_7).

Step 3 : (State T_3) During T_3, 8085 loads the data from the data bus in its Instruction Register and raises $\overline{RD}$ to high which disables the memory device.

Step 4 : (State T_4) In T_4, microprocessor decodes the opcode and on the basis of the instruction received, it decides whether to enter state T_5 or to enter state T_1 of the next

Copyrighted material

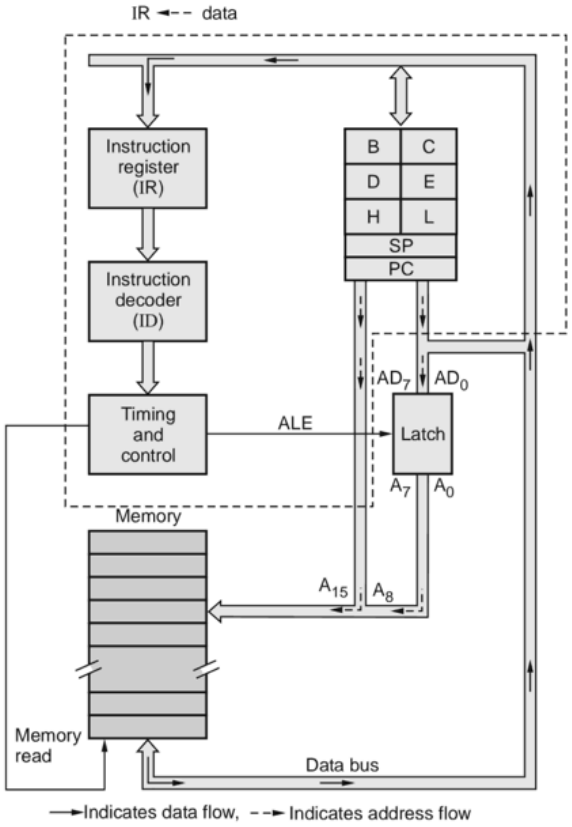

Fig. 5.4.1 (a) Data (opcode) flow from memory to micrprocessor

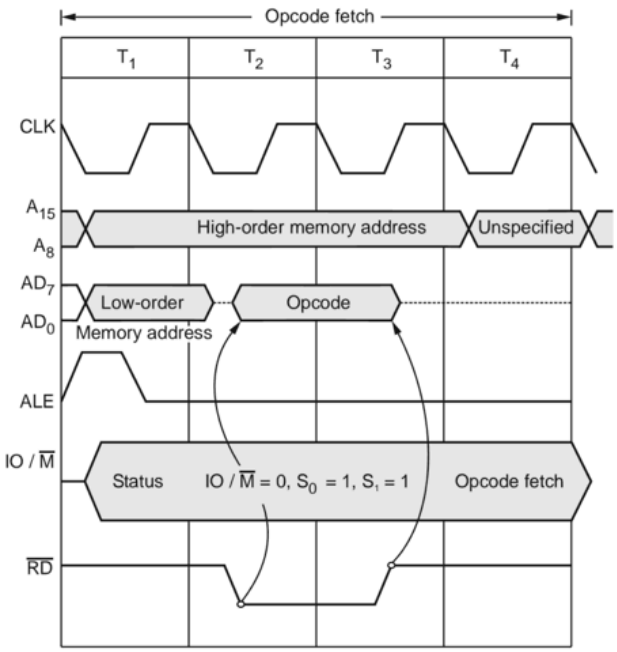

Fig. 5.4.1 (b) Opcode fetch machine cycle

Copyrighted material

machine cycle. One byte instructions those operate on eight bit data (8-bit operand) are executed in T_4.

For example : MOV A, B, ANA D, ADD B, INR L, DCR C, RAL and many more.

Note *For one byte instructions which operate on eight bit data, data is always available in the internal memory of 8085 i.e. registers.*

Step 5 : (States T_5 and T_6) States T_5 and T_6, when entered, are used for internal microprocessor operations required by the instruction. During T_5 and T_6, 8085 performs stack write, internal 16-bit, and conditional return operations depending upon the type of instruction. One byte instructions those operate on sixteen bit data (16-bit operand) are executed in T_5 and T_6. For example : DCX H, PCHL, SPHL, INX H etc.

Memory Read Cycle

The 8085 executes the memory read cycle to read the contents of R/W memory or ROM. The length of this machine cycle is 3T-states (T_1 - T_3). In this machine cycle, processor places the address on the address lines from the stack pointer, general purpose register pair or program counter and through the read process, reads the data from the addressed memory location. Fig. 5.4.2 (a) shows flow of data from memory to the microprocessor and Fig. 5.4.2 (b) shows the timing diagram for memory read machine cycle. Memory read machine cycle is similar to the opcode fetch machine cycle. However, they use only states T_1 to T_3 and the status signal values ($IO/\overline{M} = 0$, $S_1 = 1$, $S_0 = 0$) appropriate for memory read machine cycle are issued in T_1. The following section describes the memory read machine cycle in step by step manner.

Step 1 : (State T_1) In T_1-state, microprocessor places the address on the address lines from stack pointer, general purpose register pair or program counter and activates ALE signal in order to latch low-order byte of address.

During T_1, 8085 sends status signals : $IO/\overline{M} = 0$, $S_1 = 1$ and $S_0 = 0$ for memory read machine cycle.

Step 2 : (State T_2) In T_2, 8085 sends $\overline{RD}$ signal low to enable the addressed memory location. The memory device then places the contents of addressed memory location on the data bus (AD_0 - AD_7).

Step 3 : (State T_3) During T_3, 8085 loads the data from the data bus into specified register (F, A, B, C, D, E, H and L) and raises $\overline{RD}$ to high which disables the memory device.

Copyrighted material

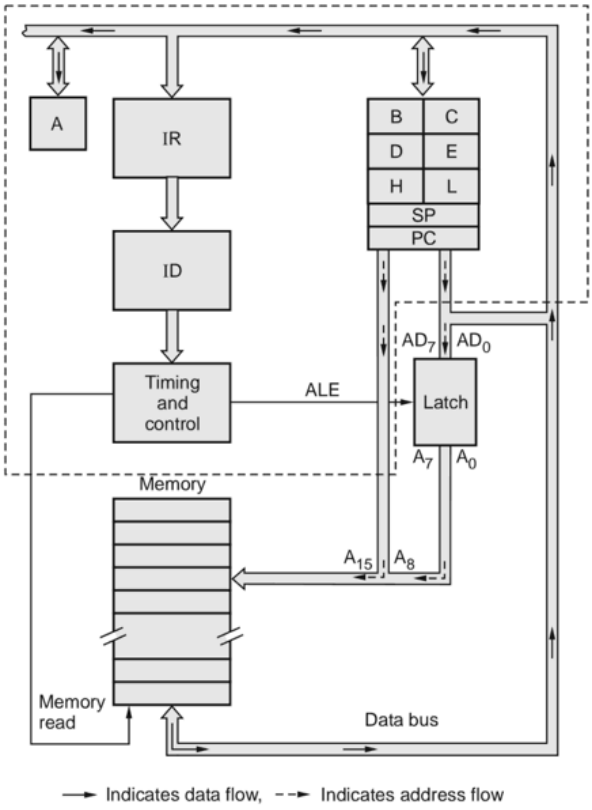

Fig. 5.4.2 (a) Data flow from memory to microprocessor

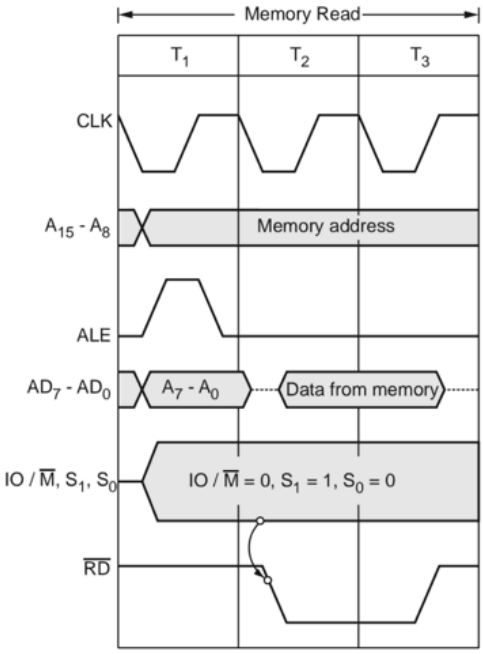

Fig. 5.4.2 (b) Memory read machine cycle

Copyrighted material

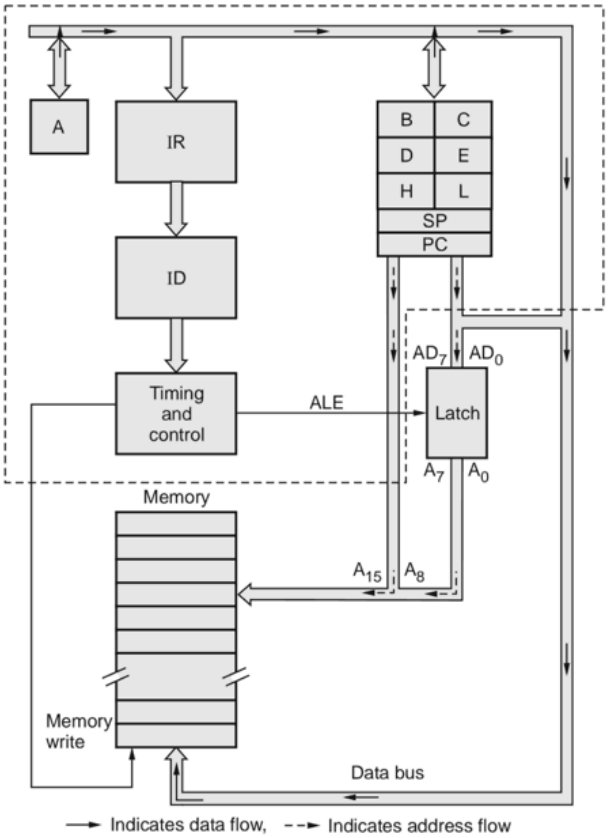

Fig. 5.4.3 (a) Data flow microprocessor to memory

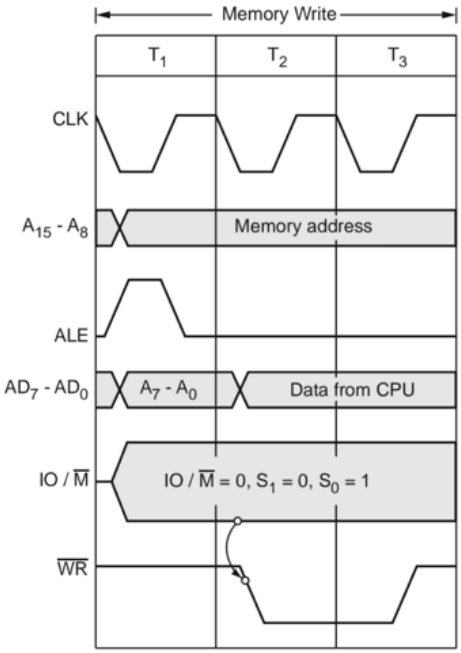

Fig. 5.4.3 (b) Memory write machine cycle

Copyrighted material

Memory Write Cycle

The 8085 executes the memory write cycle to store the data into data memory or stack memory. The length of this machine cycle is 3T-states (T_1 - T_3). In this machine cycle, processor places the address on the address lines from the stack pointer or general purpose register pair and through the write process, stores the data into the addressed memory location. Fig. 5.4.3 shows the timing diagram for memory write machine cycle. The memory write timing diagram is similar to the memory read timing diagram, except that instead of $\overline{RD}$, $\overline{WR}$ signal goes low during T_2 and T_3. The status signals for memory write cycle are : $IO/\overline{M} = 0$, $S_1 = 0$, $S_0 = 1$. The following section describes the memory write machine cycle in step by step manner.

Step 1 : (State T_1) In T_1-state, the 8085 places the address on the address lines from stack pointer or general purpose register pair and activates ALE signal in order to latch low-order byte of address. During T_1, 8085 sends status signals :

$IO/\overline{M} = 0$, $S_1 = 0$ and $S_0 = 1$ for memory write machine cycle.

Step 2 : (State T_2) In T_2, 8085 places data on the data bus and sends $\overline{WR}$ signal low for writing into the addressed memory location.

Step 3 : (State T_3) During T_3, $\overline{WR}$ signal goes high, which disables the memory device and terminates the write operation.

I/O Read and I/O Write Cycles

The I/O read and I/O write machine cycles are similar to the memory read and memory write machine cycles, respectively, except that the $IO/\overline{M}$ signal is high for I/O read and I/O write machine cycles. High $IO/\overline{M}$ signal indicates that it is an I/O operation. Fig. 5.4.4 (b) and Fig. 5.4.5 (b) shows the timing diagrams for I/O read and I/O write cycles, respectively.

Interrupt Acknowledge Cycle

In response to INTR signal, 8085 executes interrupt acknowledge machine cycle to read an instruction from the external device. Theoretically, the external device can place any instruction on the data bus in response to $\overline{INTA}$. However, only RST and CALL, save the PC contents (return address) before transferring control to the interrupt service routine. The next sections explain interrupt acknowledge cycles for RST and CALL instructions.

Copyrighted material

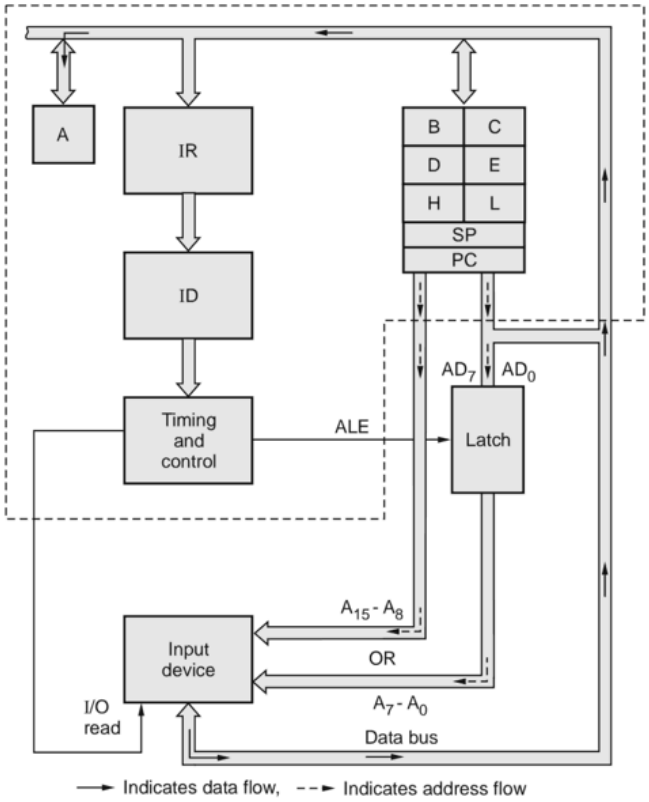

Fig. 5.4.4 (a) Data flow from input device to microprocessor

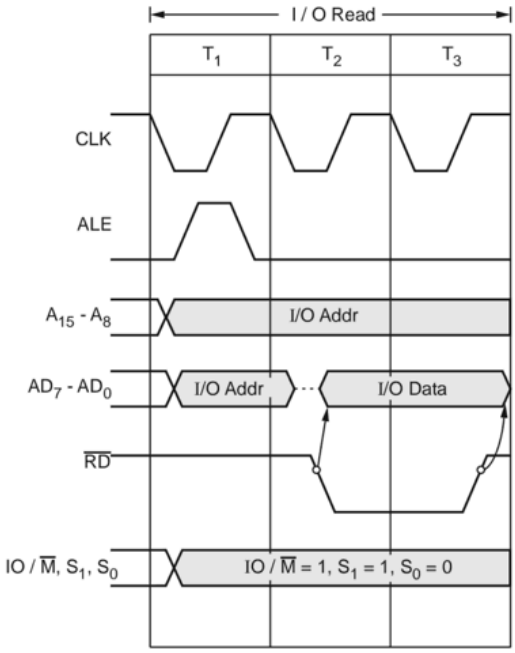

Fig. 5.4.4 (b) I/O read memory cycle

Copyrighted material

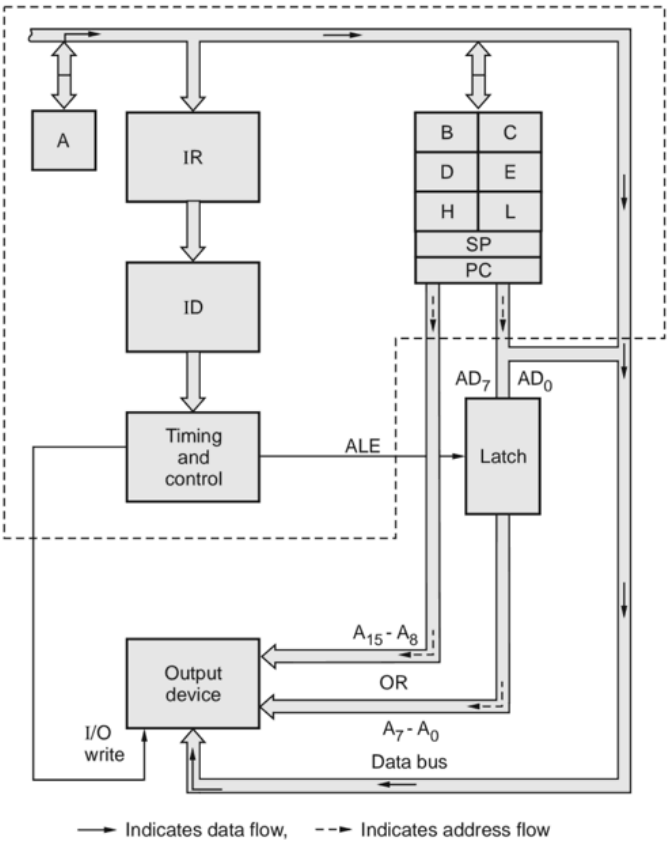

Fig. 5.4.5 (a) Data flow from microprocessor to output device

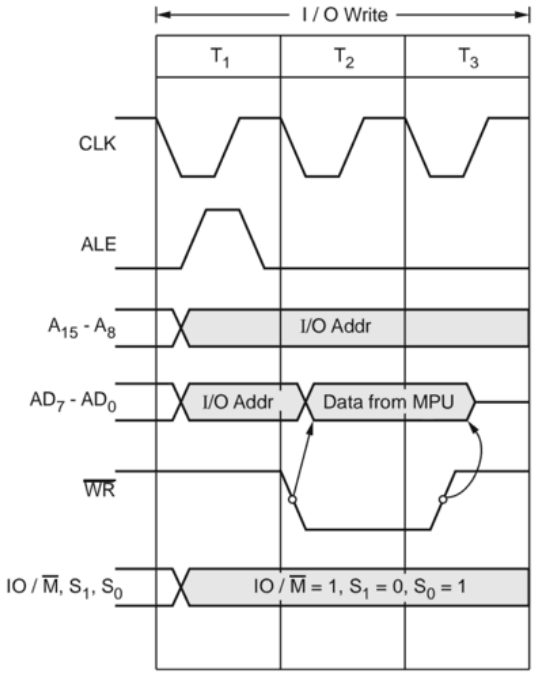

Fig. 5.4.5 (b) I/O write machine cycle

Copyrighted material